NOTES:
1. SUPERSEDES P/Ns 50620 & 59020.
2. ITEM 11 TO AFFIX ITEM 10 TO ITEM 7.
3. ITEM 11 TO BE TRIMMED TO LENGTH AT ASSEMBLY.
4. ITEM 13 MAY BE REPLACED WITH 29539 (SCREEN ASSY - 40 MESH) PER CUSTOMER REQUEST.
5. ITEM 13 MAY BE REPLACED WITH 29541 (SCREEN ASSY - 20 MESH) PER CUSTOMER REQUEST.
6. PRESSURISE WITH WATER OVER 65psi AND ENSURE LESS THAN 6 DROPS PER MIN FROM ALL LEAK POINTS.

ITEM NO.	PART NO.	DESCRIPTION	QTY
1	14631	TUBE - BODY	1
A 2	14973	PLATE - BASE	1
3	13428	CAP - SCREEN	1
4	14613	PLATE - BASE	1
5	16551	TUBE - SPACER	1
6	41052	QD - 3" MALE	1
7	14279	TAB	1
8	14633	TUBE - INLET	1
9	14632	TUBE - OUTLET	1
10	56504	DUST CAP - 3"	1
11	85100	CABLE - .062" DIA	AR
12	85710	SLEEVE	2
13	29540	SCREEN ASSY - 30 MESH	1
14	41950	FEMALE NIPPLE	1
15	81175	PLUG	1

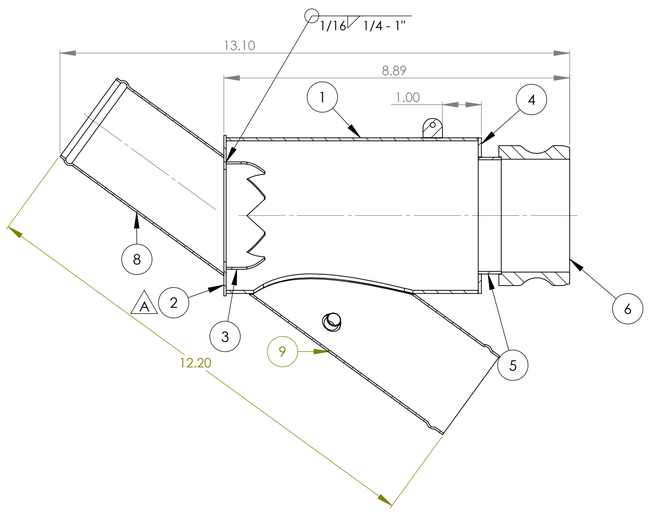

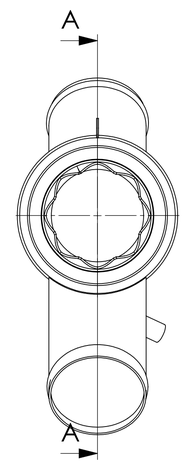

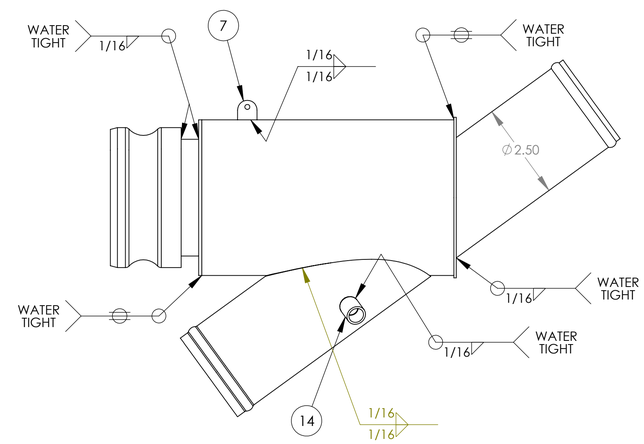

SECTION A-A

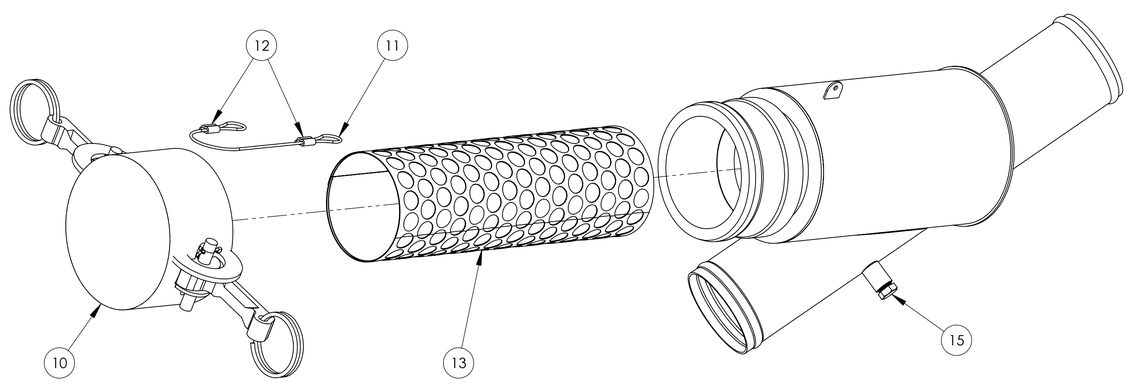

DWG NO:	REV:
59120	A

ENGINEERING APPROVED COPY
FOR MANUFACTURE

REV.	DESCRIPTION	DATE	BY
A	E.O. 7619 ; CHANGE ITEM #2, 13499 TO 14973	12/2/2015	RC

REVISIONS

NEXT ASSEMBLY: FINAL

MATERIAL: SEE BOM

FINISH

	NAME	DATE
DRAWN	JMV	7/14/11
CHECKED	RR	12/2/15
ENG APPR.		

REMOVE ALL BURRS AND SHARP EDGES
INTERPRET DRAWING PER ANSI Y14.5M-1982
SURFACE ROUGHNESS PER MIL-STD-10
ALL MACHINED SURFACES NOT TO EXCEED 63 MICROINCHES PER MIL-STD-10 UNLESS NOTED

SolidWorks

UNLESS OTHERWISE SPECIFIED:
DIMENSIONS ARE IN INCHES
TOLERANCES:
FRACTIONS ±1/16
.XX ±.03
.XXX ±.010
ANGLE ± 1/2°

HOLE DIA.:

.0135 - .125 DIA.	+.004	-.001
.1260 - .250 DIA.	+.005	-.001
.2510 - .500 DIA.	+.006	-.001
.5010 - .750 DIA.	+.008	-.001
.7510 - 1.000 DIA.	+.010	-.001

THIRD ANGLE PROJECTION

TRANSLAND

TITLE: SST LINE STRAINER, 2 1/2" WITH QD CAP

SIZE D | DWG. NO. 59120 | REV A

SCALE: 1:2 | WEIGHT: ?? | SHEET 1 OF 1