NOTES (UNLESS OTHERWISE SPECIFIED):

1. REFERENCE WEATHERLY AVIATION CO., INC. PART NO. 71983.

LETTER	CHANGE	BY DATE	REFERENCE
NC	INITIAL RELEASE	SCM 6/21/95	

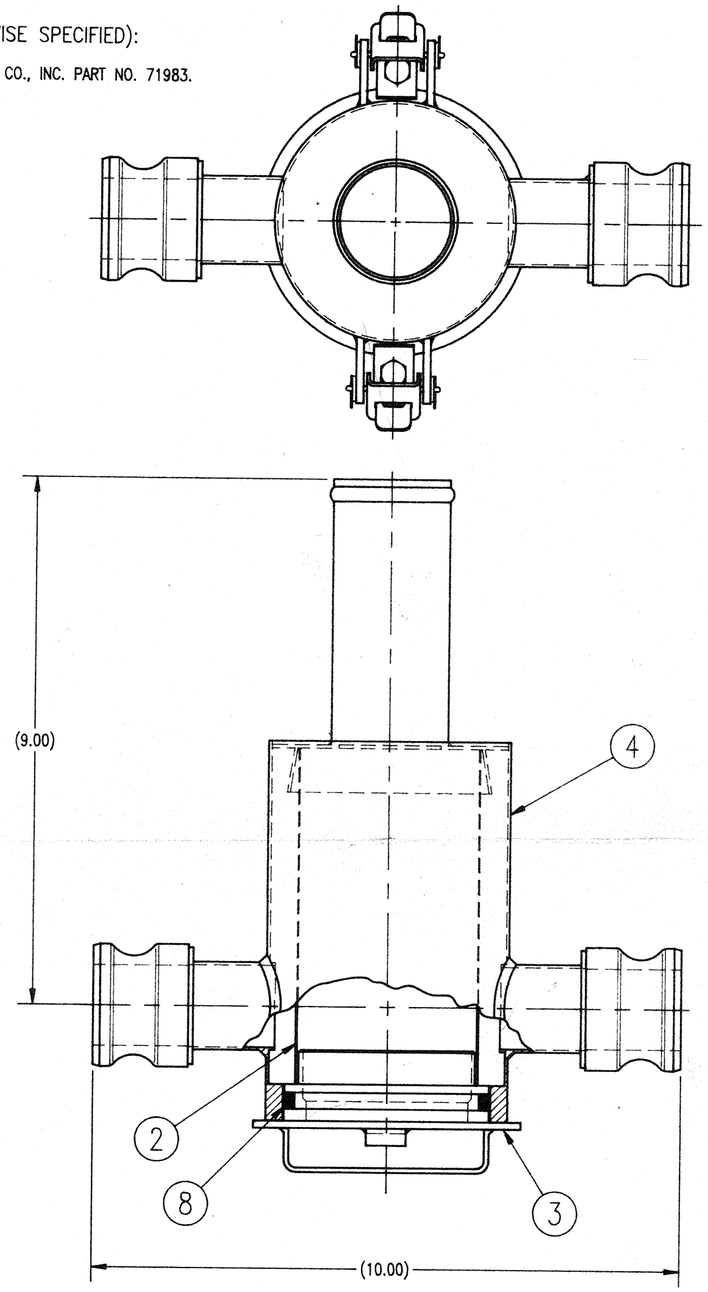

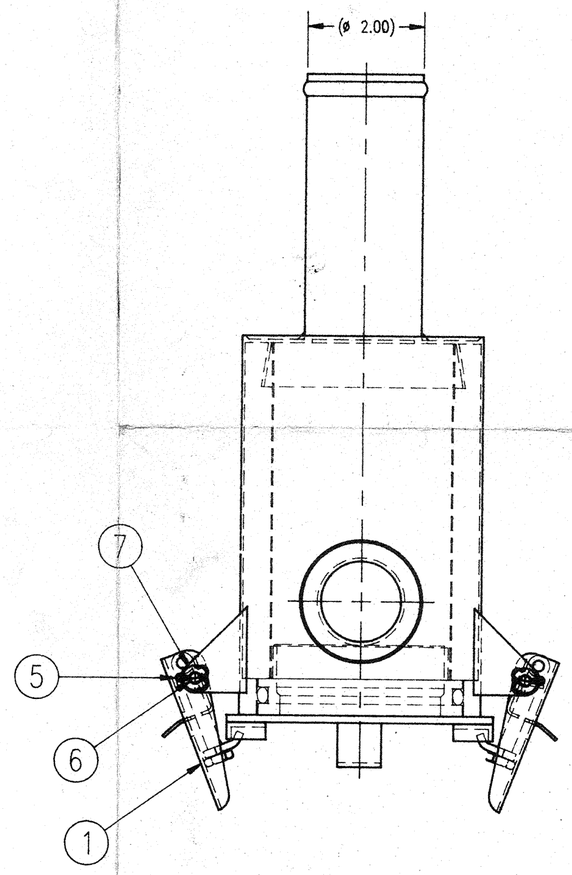

DWG NO. 50845

REVISION NC

ITEM NO.	PART NO.	NO. REQD.	DESCRIPTION / MATERIAL	SIZE	SPECIFICATION
8	81624	1	O-RING		
7	81219	4	WASHER		
6	80611	4	PIN		
5	80586	4	COTTER PIN		
4	24423	1	BODY ASSY		
3	23401	1	LID ASSY		
2	21523	1	SCREEN ASSY		
1	20441	2	LATCH ASSY		

NO. REQD.	NEXT ASSEMBLY	NO. REQD.	FINAL ASSEMBLY

HEAT TREAT

FINISH

DRAWN MARSELOS 6/21/95 | CHECKED | STRESS | APPROVED

UNLESS OTHERWISE SPECIFIED
TOLERANCES:
.00 ± .03
.000 ± .010
ANGULAR ± 1/2°
DRILLED HOLES PER AND 10387
REMOVE ALL BURRS AND SHARP EDGES
DO NOT SCALE DRAWING
INTERPRET DRAWING PER ANSI Y14.5M-1982

√ SURFACE ROUGHNESS PER MIL-STD-10

√ FINISH ALL SURFACES NOT OTHERWISE SPECIFIED

SCALE 1/2

DWG SIZE C

TRANSLANTIC INC.

REV NC

TITLE ASSEMBLY- SST Y-STRAINER WEATHERLY

DRAWING NUMBER 50845

9.300